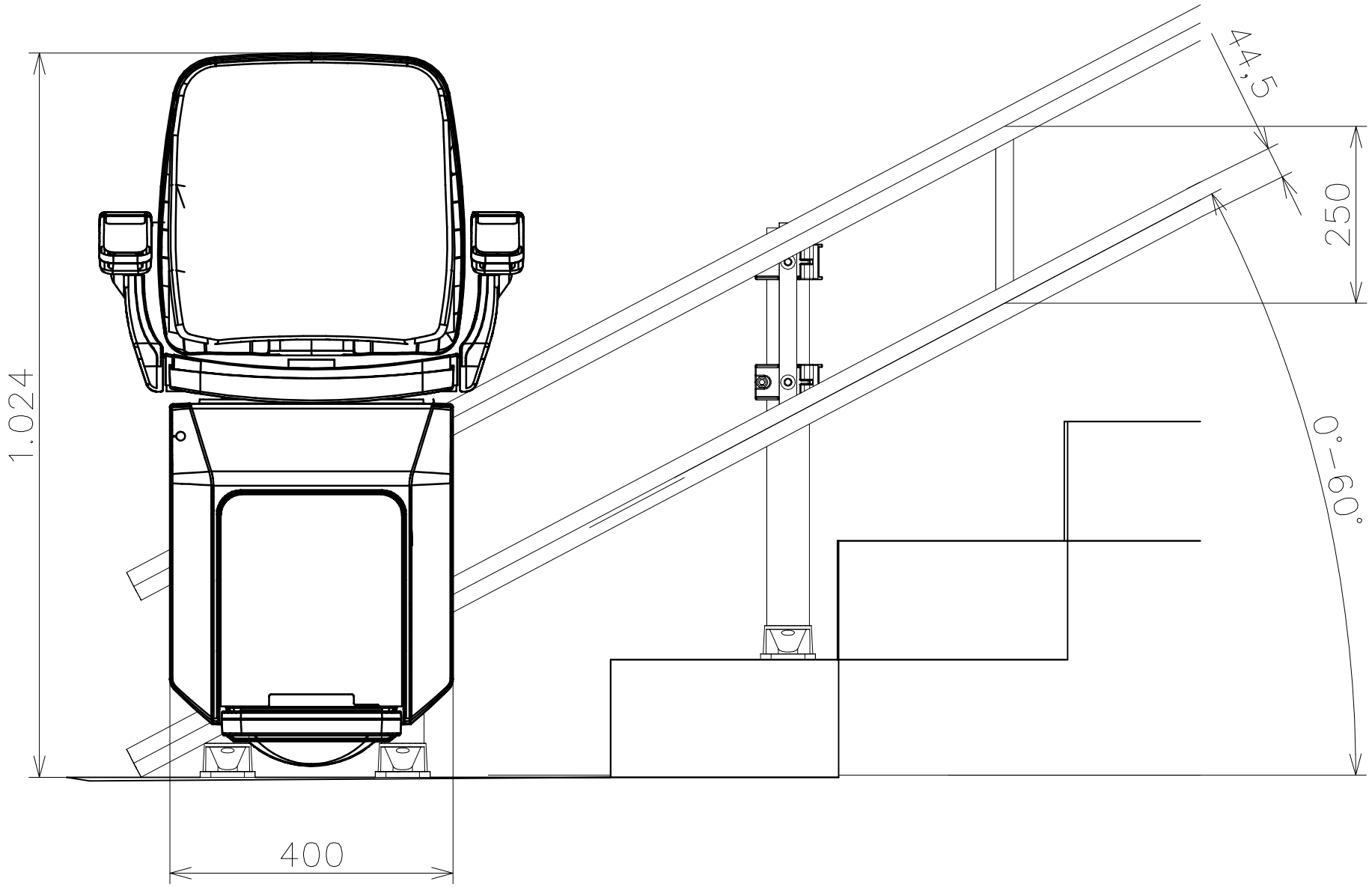

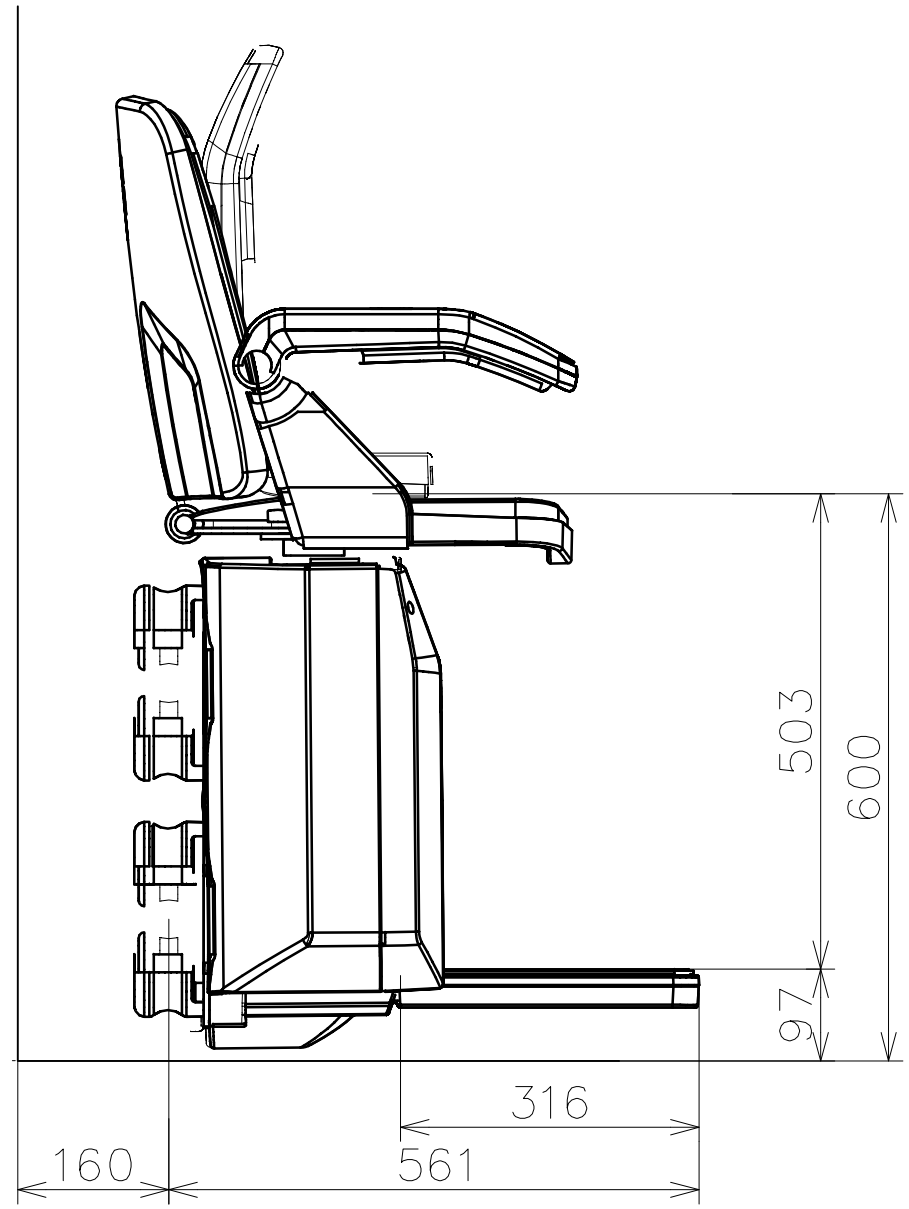

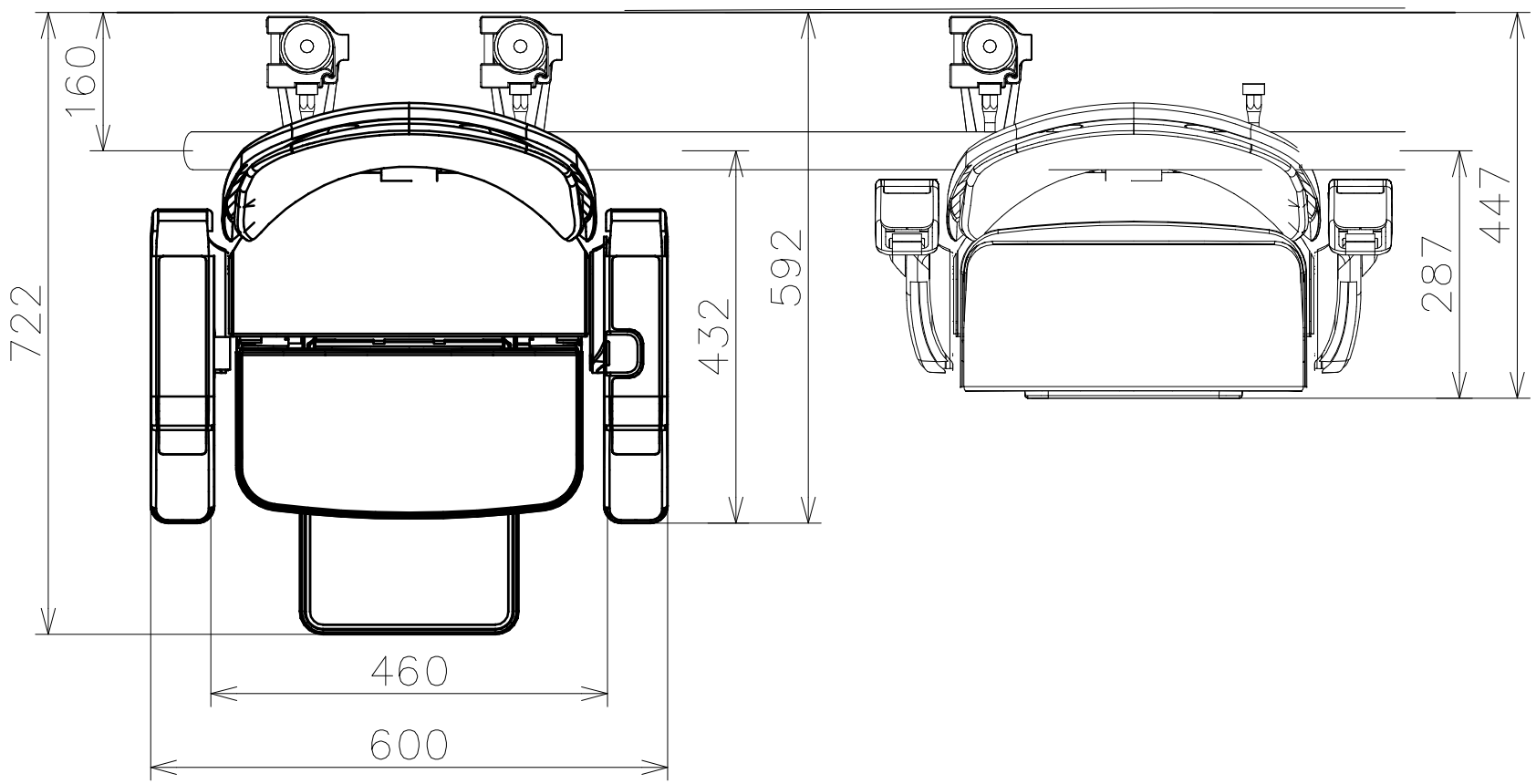

Allgemeintoleranzen nach DIN 7168-m-s						scale:	1 : 1
						weight:	k.A.
				HIRO 160 QN Face Lift Standard			
					date	name	HIRO LIFT Bielefeld, Germany
				drawn by	16.11.2023	Waltenberg	
				approved			
				dwg.-No.:		art-No.:	page 1
No.	changes	date	name				
				order-No.:		class.-No.:	of 1